Tamarack Solar Products

Installation Manual

UNI-SP02-MAN
2019 Edition v1.01

Formodels:

UNI-SP/01XX
UNI-SP/02
UNI-SP/02A
UNI-SP/02X
UNI-SP/03
UNI-SP/03W

Table of Contents

Introduction 1
Customer Support 1
Tools Required 1
Component views 3
Step 1. Measure PV Mounting Hole Distance 4
Step 2. Mounting Rail Supports on PV Module 4
Step 3. Attaching Clips to Rails 6
Step 4. Attaching Upper Bucket to the Pole..... 7
Step 5. Mounting PV Assembly on Pole..... 9
Step 7: Attaching Brace Rails 11
Installer Responsibility 12
Warranty Information 12

Introduction

The Side of Pole Mount is a simple and universal pole mounting solution for small area solar photovoltaic (PV) needs. With its user-adjustable angle settings, the Side of Pole Mount can support installations in a wide range of locations. These can be installed on 2”to 4” sch-40 pipe, (2 3/8 Ø to 4 1/2 Ø), flat surfaces, and on a 25G ROHN tower frame. Adjustable from 30° to 60°

Customer Support

Tamarack Solar makes every effort to ensure your mounting kit is easy to install. If you need assistance at any point in your installation or have suggestions on how we can improve your experience, call customer support at **1-800-819-7236** or email us at **info@tamaracksolar.com**

Tools Required

Torque values are “dry”, add 15% if using anti-seize lubricant on **Stainless** hardware (Recommended).

Using a torque wrench with a range of up to 144 inch-pounds or 12 Ft-Lbs:

5/16“ socket (for the hose clamps)	torque to 35 Inch-pounds
7/16“ socket	torque to 84 inch-pounds (7 Ft-Lbs).
1/2 “ socket	torque to 144 inch-pounds (12-Ft Lbs).

Components List The following parts are used in the Braced 2 bucket SOP mount models:

MOUNT MODEL		UNI-SP/01XX	UNI-SP/02	UNI-SP/02A	UNI-SP/02X	UNI-SP/03	UNI-SP/03W
Component	Description	Qty Req	Qty Req	Qty Req	Qty Req	Qty Req	Qty Req
51-3517-200	Bucket, 25.5" SOP		2	2		2	
51-3517-242	Bucket, 35.6" SOP	2			2		2
51-3517-243	Clip, Left End	2	2	2	2	2	2
51-3517-244	Clip, Right End	2	2	2	2	2	2
51-0530-000	Rail, 30" UNI SOP/GR	2					
51-0545-002	Rail, 45" UNI SOP/GR		2				
51-0555-001	Rail, 55.0" UNI SOP/GR			2	2		
51-0580-011	Rail, 70.0" UNI SOP/TOP.					2	2
51-0519-000	Rail, 19" Outer	2	2	2	2		
51-0519-001	Rail, 19" Inner	2	2	2	2		
51-3029-000	Rail, Inner 29"					2	2
51-3029-001	Rail, Outer 29"					2	2
27-5000-010	Clamp, Hose, 1/2" wide range 1.875" to 5"	4	4	4	4	4	4
29-5000-000	Kit, 1/4 x 3/4 (4set) Std Mod	1	2	2	2	3	3
29-5002-000	Kit, Spare (1/4 + 5/16) X 3/4	1	1	1	1	1	1
29-5004-010	Kit, 5/16 X 3/4 (16) SET SST	1	1	1			
29-5005-000	Kit, 5/16 X 3/4 (4) SET SST				2	1	1
29-5006-001	Kit, 5/16 X 3/4 (6) Set SST	1	1	1	2	3	3
MAX SQUARE FEET OF MODULE AREA		7	14	14	14	21	21

Note: a "set" is 1 bolt, 2 flat washers, 1 lock washer and 1 hex nut.

Component views

The following parts are used across various models of our Side of Pole mount and ship with necessary hardware:

Bucket

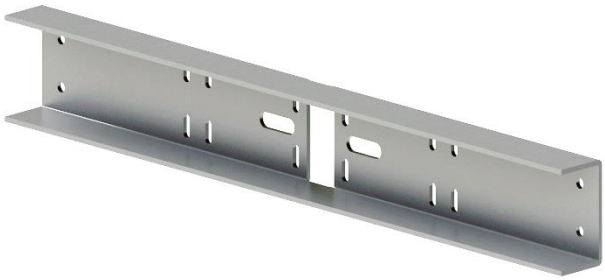

Hose clamp

Left and Right Clips

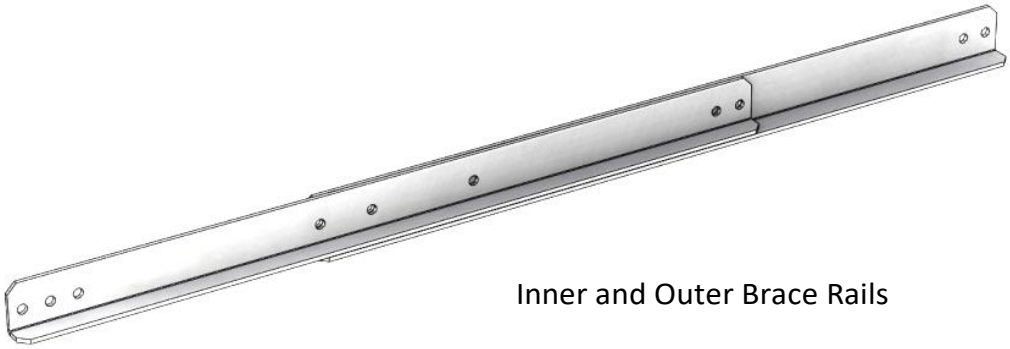

Panel Support Rails

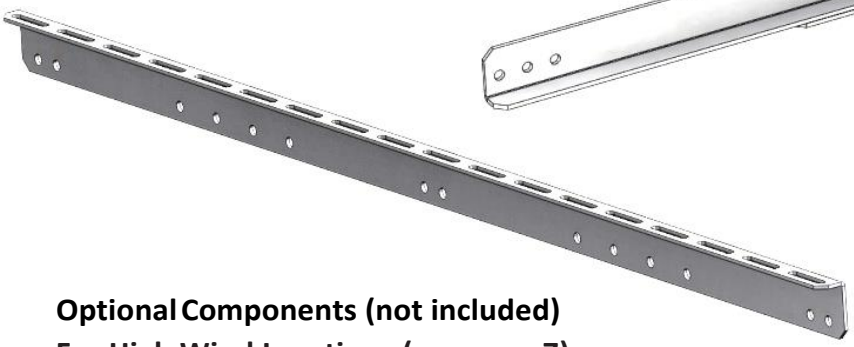

Inner and Outer Brace Rails

Optional Components (not included)

For High Wind Locations (see page 7)

1 pair: 1/2" - 13 x 2", 3", or 4" U-Bolts

With Flat and Lock Washers and Nuts per bucket

For mounting to a wooden pole 5" in Diameter or Larger (see page 8)

2 sets per bucket: 1/2"x 3" (or longer) Lag bolts and wide washers

For mounting on a 25G Rohn tower (see page 8)

4 per bucket, hose clamps, 1 9/16" to 2 1/2" range

Step 1. Measure PV Mounting Hole Distance

A. Lay the module(s) face down on a protected surface in the suitable orientation. Leave approximately 1/4" or more space between panels if more than one.

B. Measure the center to center distance between the inside mounting holes on the back of the PV module as shown and make a note of it. **(Measure across the panel if mounting one panel in portrait.)**

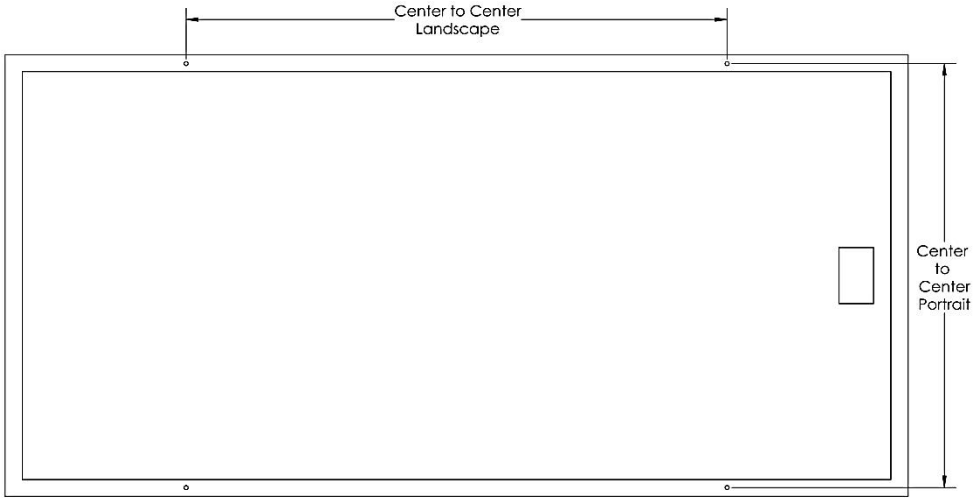

Step 2. Mounting Rail Supports on PV Module

A. Review the reference diagram below to determine the orientation of the panel support rails and the end clips, based on the center to center range of your module(s) and the length of the bucket in your mount model. (See next page for 25.5" bucket range and common detail views)

B. Determine panel spacing and secure the rails with a 1/4-20 x 3/4" bolt, lock washer, and hex nut in each of the PV mounting holes (4 on each panel). Tighten the bolts to 84 in-lbs (see page 6)

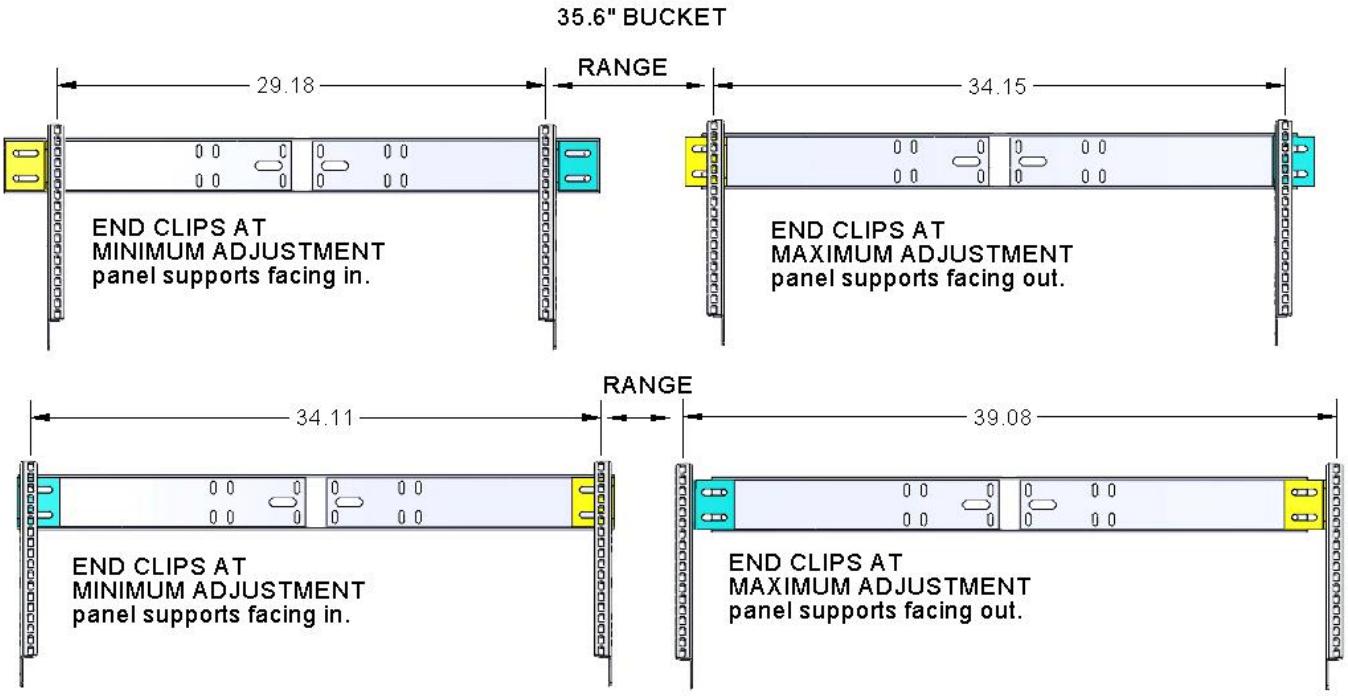

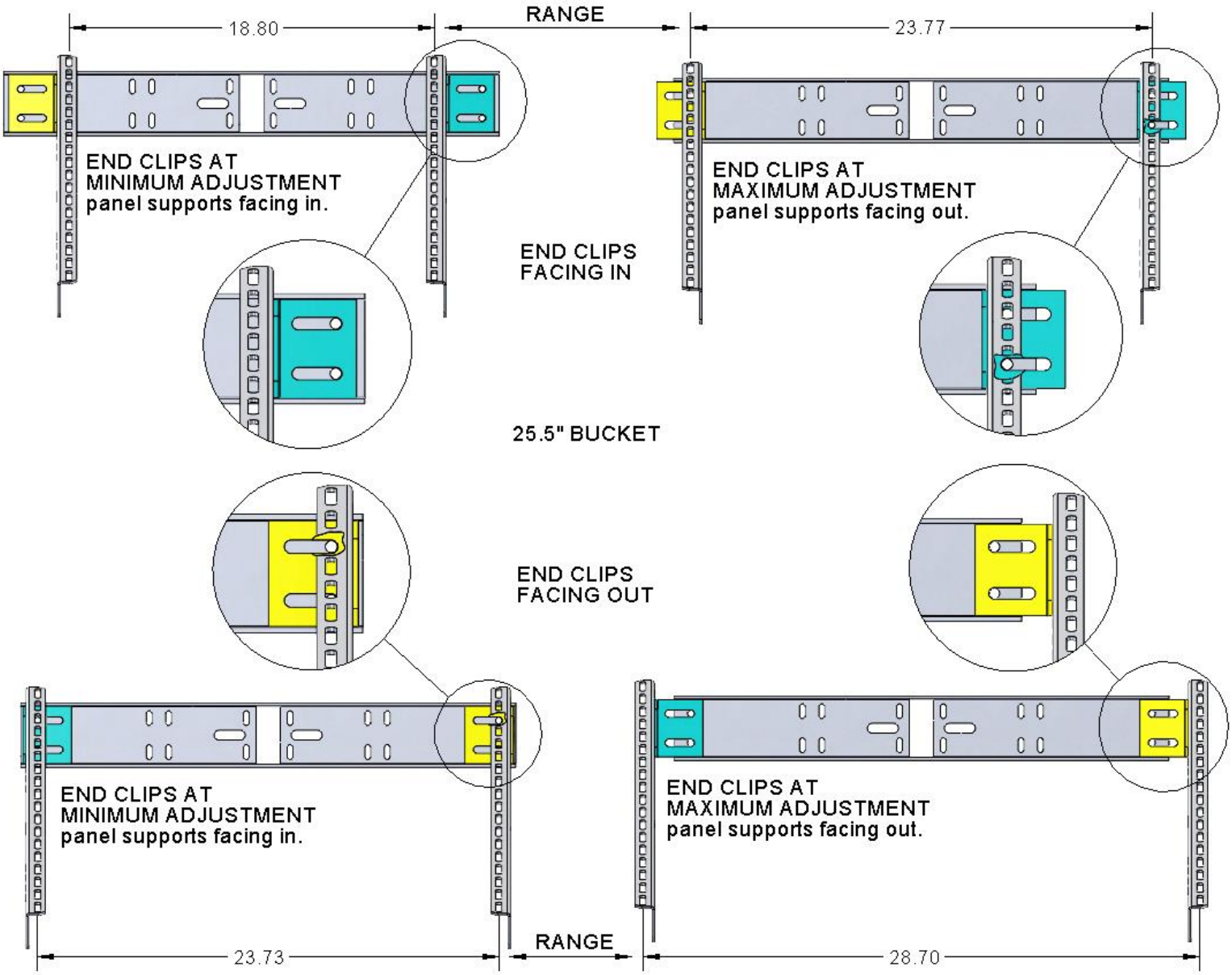
18.80
RANGE
23.77
END CLIPS AT
MINIMUM ADJUSTMENT
panel supports facing in.
END CLIPS AT
MAXIMUM ADJUSTMENT
panel supports facing out.
END CLIPS
FACING IN
25.5" BUCKET
END CLIPS
FACING OUT
END CLIPS AT
MINIMUM ADJUSTMENT
panel supports facing in.
END CLIPS AT
MAXIMUM ADJUSTMENT
panel supports facing out.
23.73
RANGE
28.70

Step 3. Attaching Clips to Rails

A. Attach the clips to the rails as determined by the bucket range diagrams. (Shown in previous step). Example shown has the clips facing in on the inside of the rails that are facing out. **(Note the orientation of the curved slot)**

B. In each of the clip mounting holes, use a 5/16-18 x 3/4" bolt and flat washer on one side and a flat washer, lock washer and nut on the other. Tighten these bolts finger tight only at this time (these will torque to 144 in-lbs. after assembly is finished and tilt angle is final.)

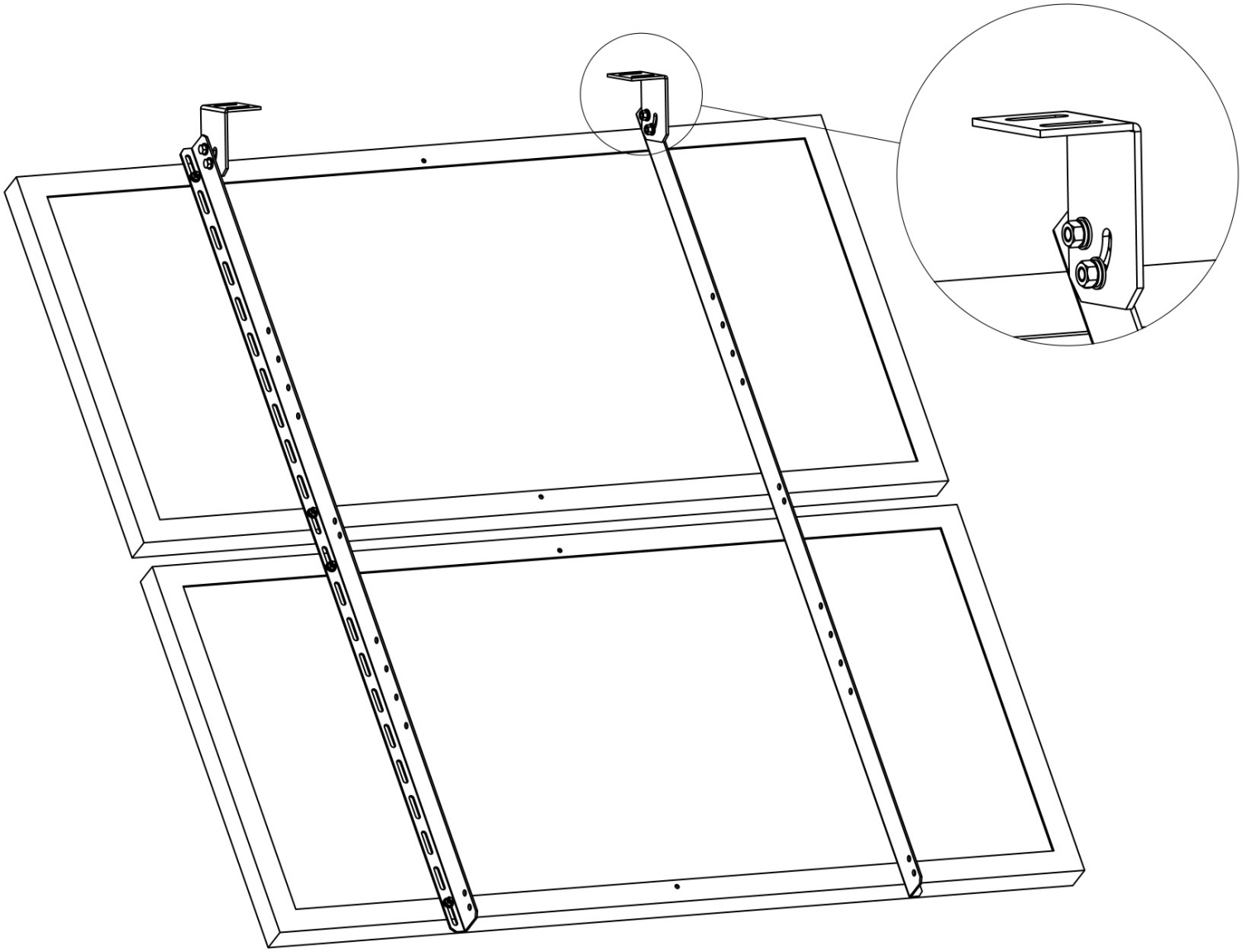

Step 4. Attaching Upper Bucket to the Pole

A. Un-screw the hose clamp to release the end and thread each hose clamp through the sets of narrow center slots in the top bucket as shown and place at the desired location on the pole.
NOTE: KEEP THE SOLID SECTION OF THE CLAMP CROSSING OVER BOTH SLOTS.

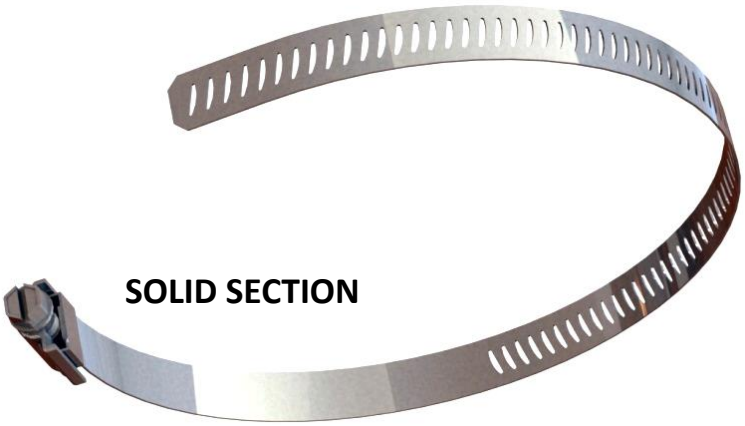

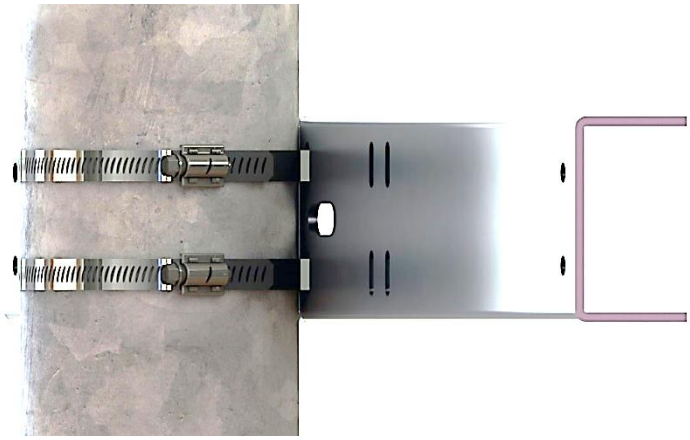

B. Once the top bucket in the desired position, tighten the hose clamp screws to 35 in-lbs.
Note: Always recheck torque on hose clamps after exposure to windy conditions.

C. In high loading conditions, in conjunction with the hose clamps, add the (user provided) 1/2-13 U-Bolts as appropriate for the pipe size being used. tighten securely but take care not to deform the bucket

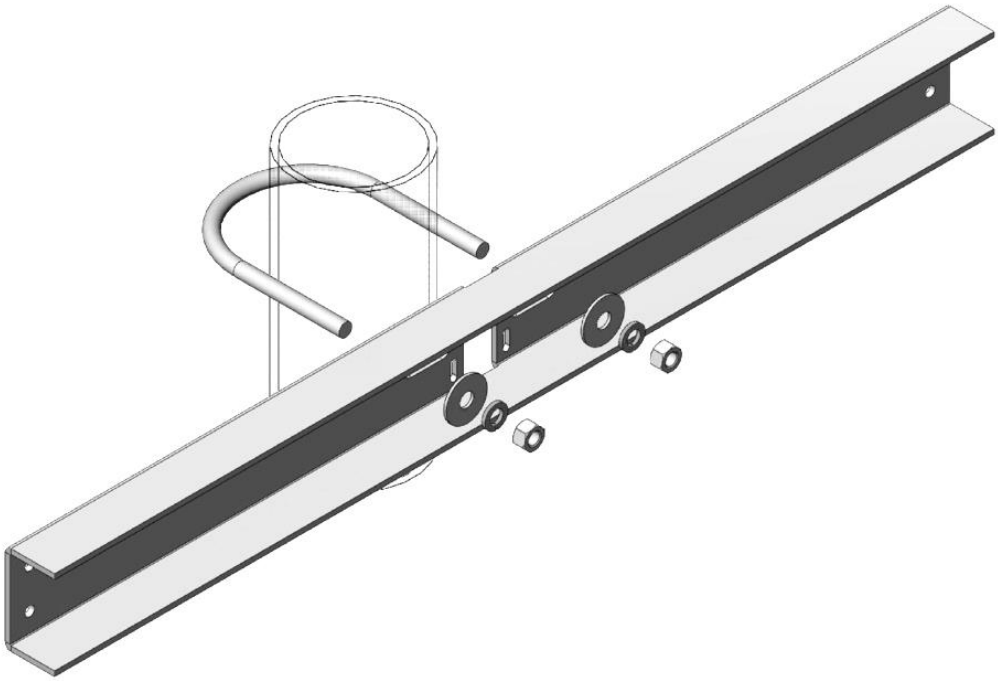

D. Use (user provided) 1/2” lag bolts as appropriate to the wooden structure being mounted to (telephone pole or post). Tighten securely but take care not to deform the bucket.

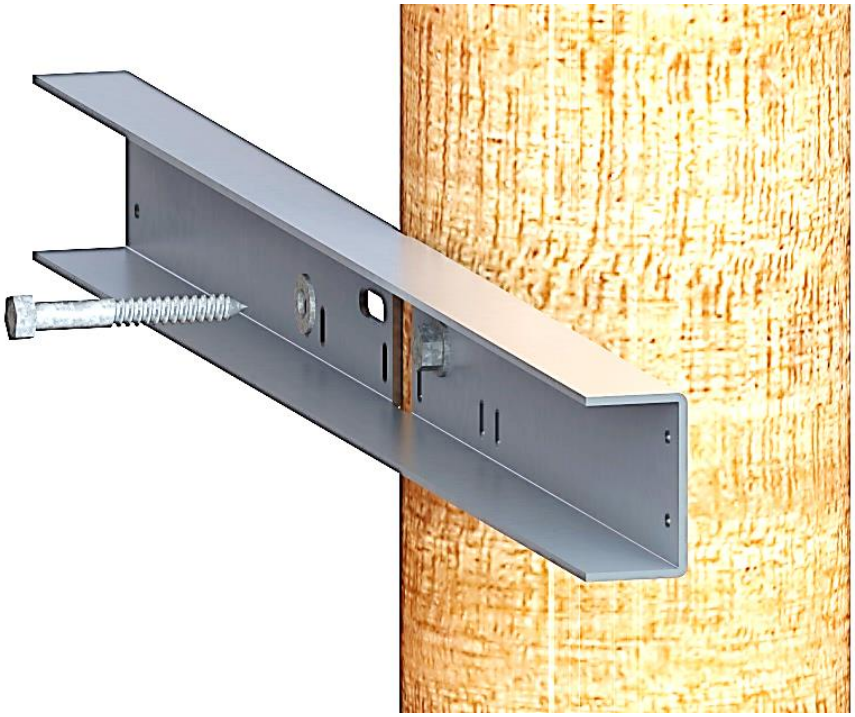

E. Use (user provided) hose clamps to attach buckets to a 25G Rohn tower.

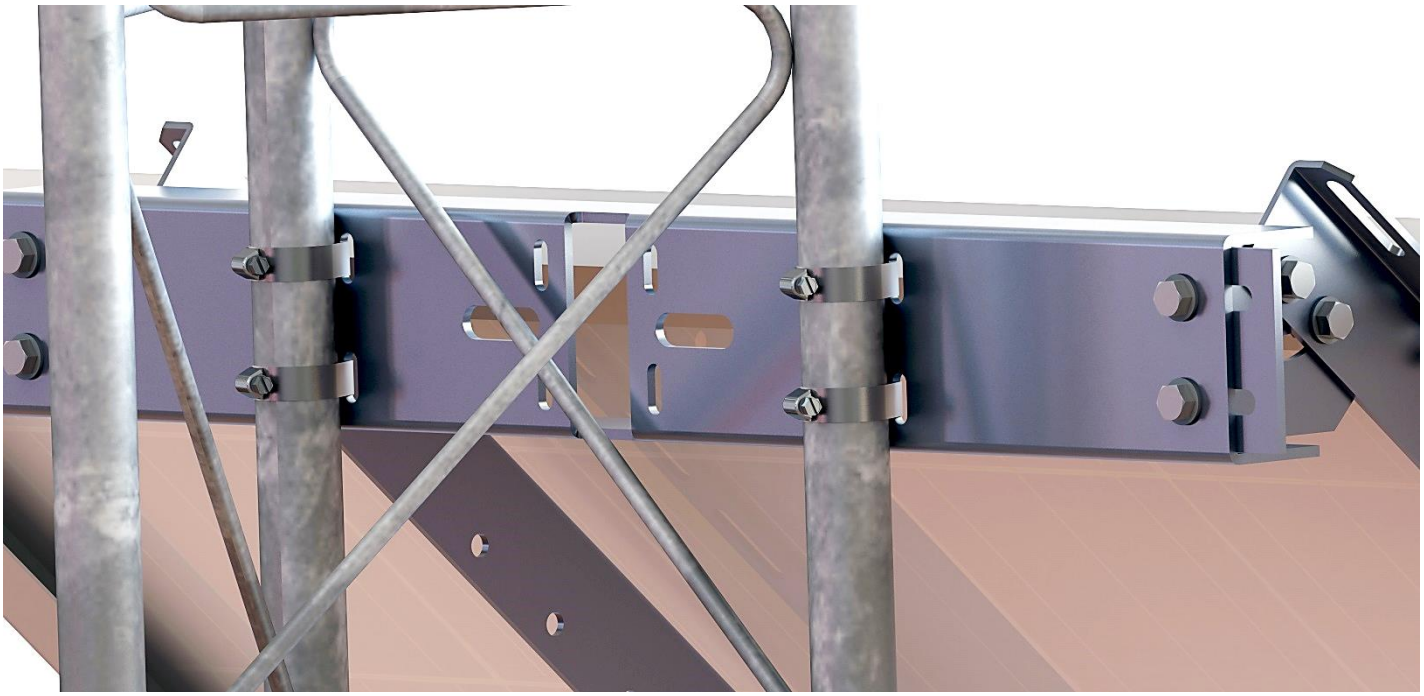

Step 5. Mounting PV Assembly on Pole

A. Place the PV module assembly so the holes on the clips line up with holes in the inside of the bucket. Depending on the size of the panel you started with, your assembly may look different than what is shown in the provided view, with the clips and rails facing in the opposite direction.

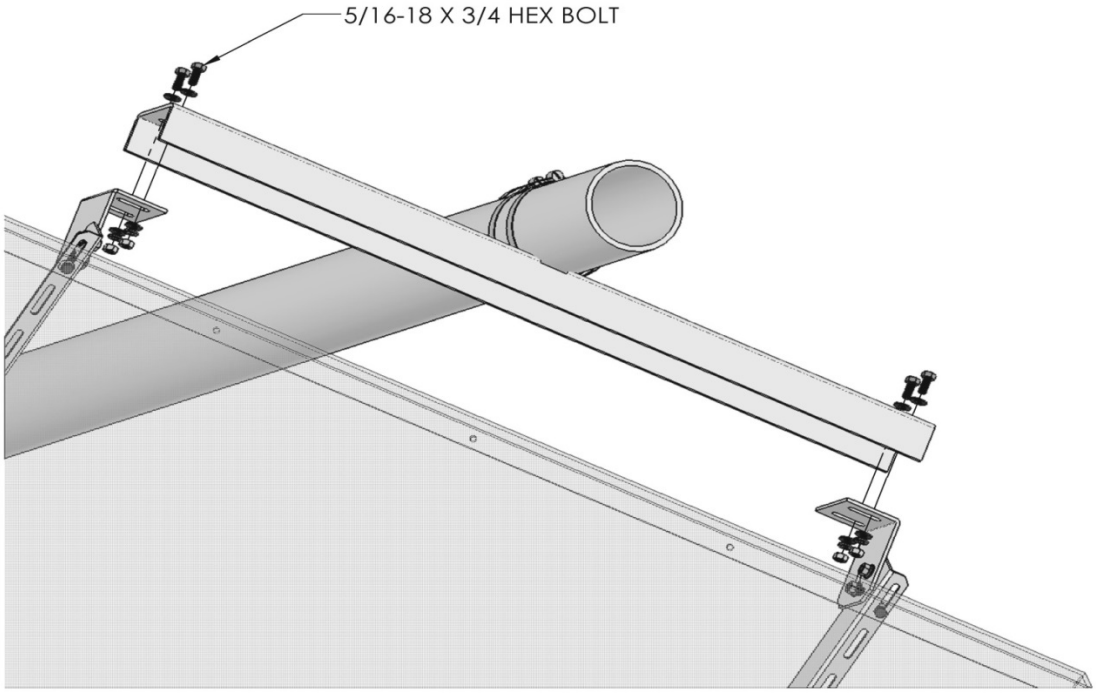

B. Attach the clips to the bucket. In each of the 4 mounting holes, use a 5/16-18 x 3/4" bolt and flat washer on one side and a washer, lock washer and nut on the other. Tighten bolts to 144 in-lbs.

C. Prop up the array to the desired angle and tighten the bolts to 144 in-lbs. but leave the prop in place while installing the second bucket and brace rails.

D. Install the lower bucket loosely to the pole so it can be moved up or down for adjustment to install the brace rails.

E. Loosely install the left and right clips to the lower bucket facing the same direction as the clips on the upper bucket. **Note position of the curved slot.**

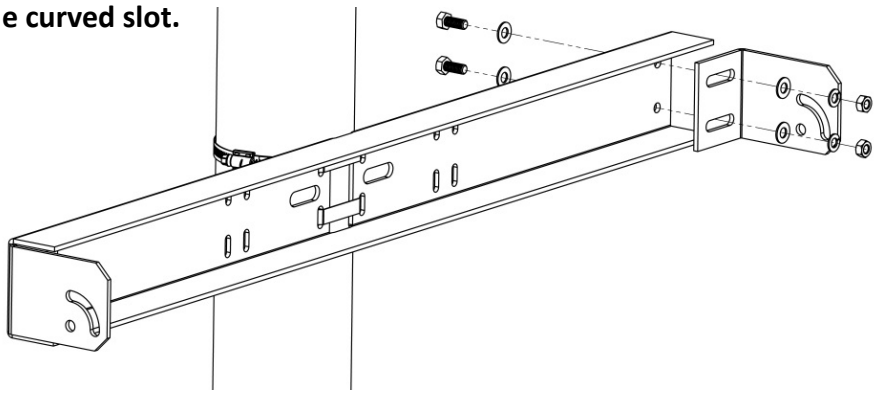

Step 6: Assembling Inner\Outer Brace Rails

A. Determine the best mounting holes on the panel support to install the inner\outer brace rails that would best keep them closest to a right angle and keep the maximum overlap of the inner\outer brace rails for your desired angle setting.

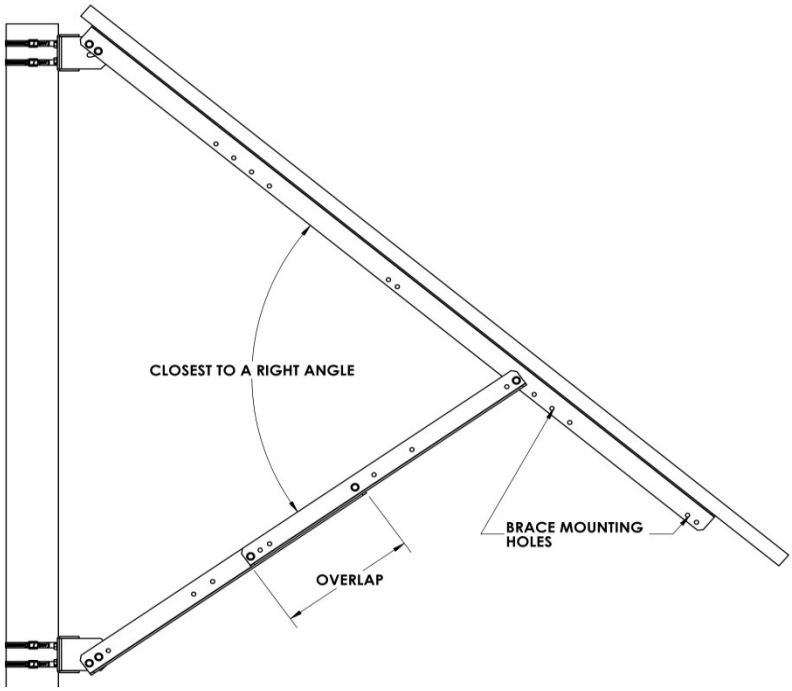

B. Line up an inner and outer support rail as shown so that two of the holes in the rails line up that are closest to the ends of the rails.

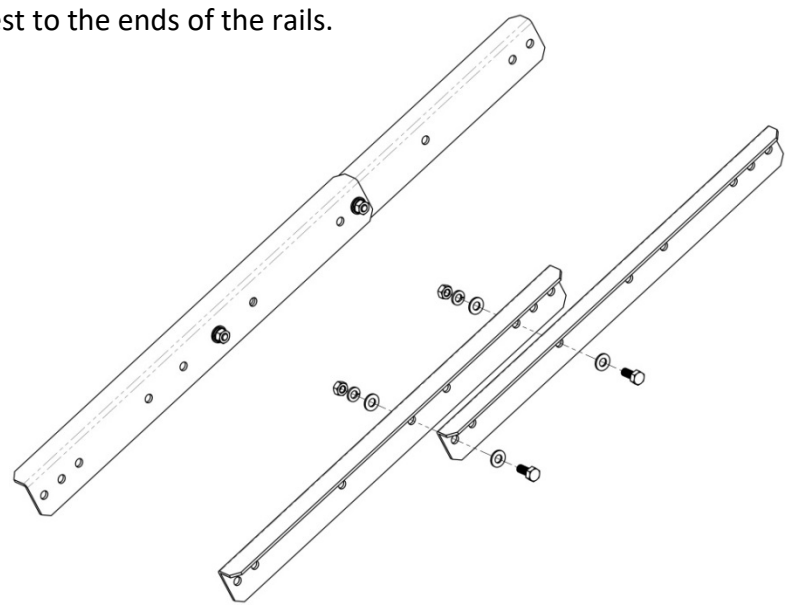

C. Bolt the rails together using a 5/16-18 x 3/4" bolt and flat washer on one side, and a flat washer, lock washer and nut on the other. Tighten the bolts to 144 in-lbs.

D. Repeat with the second set of support rails.

Step 7: Attaching Brace Rails

A. For each of the two pre-assembled brace rails, loosely bolt one end of the brace rails to the panel supports and the other end to the corresponding clips, using 5/16-18 x 3/4" bolts, flat washers, lock washer, and hex nuts. (move lower bucket up or down for alignment) Torque to 144 in-lbs and torque the hose clamps to 35 inch Lbs on the lower bucket.

B. Do a final check that all hardware is torqued to spec.

NOTE: AFTER A HEAVY WIND EVENT RE TORQUE THE HOSE CLAMPS.

Installer Responsibility

The installer is solely responsible for:

i. Complying with all applicable local or national building codes, including any that may supersede this manual;

ii. Ensuring that Tamarack Solar and other products are appropriate for the particular installation and the installation environment;

iii. Using only Tamarack Solar parts and installer-supplied parts as specified by Tamarack Solar. Substitution parts may void the warranty;

iv. Ensuring safe installation of all electrical aspects of the PV array; and

v. Ensuring correct and appropriate design parameters are used in determining the design loading used for the specific installation. Parameters, such as snow loading, wind speed, exposure and topographic factor should be confirmed with the local building official or a licensed professional engineer.

Warranty Information

Tamarack Solar warrants each Mounting Structure to be free from defects in materials and workmanship for ten (10) years from the date of first purchase ("Warranty Period"), when installed properly and used for the purpose for which it is designed, except for the finish, which shall be free from visible peeling, or cracking or chalking under normal atmospheric conditions for a period of three (3) years, from the earlier of 1) the date the installation of the Product is completed, or 2) 30 days after the purchase of the Product by the original Purchaser ("Finish Warranty"). The Finish Warranty does not apply to any foreign residue deposited on the finish.

All installations in corrosive atmospheric conditions are excluded. The Finish Warranty is VOID if the practices specified by AAMA 609 & 610-02 – "Cleaning and Maintenance for Architecturally Finished Aluminum" (www.aamanet.org) are not followed by Purchaser for Tamarack Solar's aluminum based products.

The warranty covers the replacement cost of parts to repair the product to proper working condition. Transportation and incidental costs associated with warranty items are not reimbursable. The warranty does not cover normal wear, or damage resulting from misuse, abuse, improper installation, negligence, or accident, or typographical errors in instruction manuals. **The Warranty does not cover any defect that has not been reported in writing to Tamarack Solar within ten (10) days after discovery of such defect**. Furthermore, it does not cover units that have been altered, modified or repaired without written authorization from the manufacturer or its authorized representative, or units used in a manner or for a purpose other than that specified by the manufacturer. Tamarack Solar's entire liability and Purchaser exclusive remedy, whether in contract, tort or otherwise, for any claim related to or arising out of breach of the warranty covering the Mounting Structures shall be correction of defects by repair, replacement, or credit, at Tamarack Solar's discretion. Refurbished Mounting Structures may be used to repair or replace the Mounting Structures

Tamarack Solar shall have no liability for any injuries or damages to persons or property resulting from any cause, whatsoever, or any claims or demands brought against Tamarack Solar by Purchaser, any employee of Purchaser, client of Purchaser, end-user of the Product or other party, even if Tamarack Solar has been advised of the possibility of such claims or demands (collectively, "Third Party Claims"). This limitation applies to all materials provided by Tamarack Solar during and after the Warranty Period.